Feeder/Dispenser

VALUE SERIES

Model V-1000 CE

Patent Pending.

Streamfeeder®

We Have Your Solution.™

OVERVIEW

The V-1000 is the newest generation of continuous feeding technology in our Value Series. The V-1000 features quick and tool-less setup, quick make-ready, and easy maintenance. It is capable of feeding a wide variety of materials with exceptional alignment qualities.
CE certified.

APPLICATIONS

- Mail Processing
- Ink Jet Bases
- Labeling Bases
- Tabber Bases
- Folding Machines
- Reinforcing Machines

TECHNICAL DATA

Maximum Product Size: ..... 12 W x 12 L in (304.8 x 304.8 mm)
Minimum Product Size: ..... 2 W x 3 L in (50.8 x 76.2 mm)
Min/Max Product Thickness: ..... .003-1.0 in (.07-25.4 mm)
Belt Speed: ..... 7800 ipm (19,812 cm/min)
Electrical Requirements: 115vac, 60Hz, 3A
230vac, 50/60Hz, 1.5A
Weight: ..... 47 lbs. (21.3kg)
Warranty: ..... Two-year limited

FEATURES / ADVANTAGES / BENEFITS

FEATURES	ADVANTAGES	BENEFITS
Movable Feed Belts	Position belts for optimum product feeding.	Consistently feed a wide variety of products straight.
Movable Product Separators	Separate product either on or off the belts.	Separate products that vary in thickness.
Quick Release Side Guides	Allows side guides to easily pass over belts.	Faster setup increases productivity.
Single Knob Side Guide Adjustment	Individual side guide position adjustment.	Reduces operator setup time.
Quick Change Carriage	Faster belt replacement.	Reduces downtime.
Quick Access Service Panel	Easy access to controls and electronics.	Simple, efficient maintenance.
Universal Electronic Interface Kit	Interface the start/stop function with most systems.	Ability to integrate with most mailing bases.

DIMENSIONS

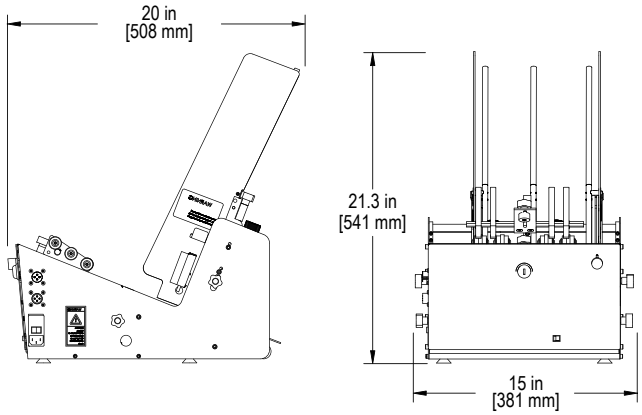

Thiele Technologies

103 Osborne Road · Minneapolis, MN 55432-3131 · USA
t 763.502.0000 · f 763.502.0100 · www.streamfeeder.com · E-mail: sales@streamfeeder.com

© 2008 Thiele Technologies, Inc. · P/N 00900509 · Printed in USA

Specifications are subject to change without notice.